TR001
Dip Bars

INFORMATION ABOUT PRODUCT

Movement space	370x415x370 cm
Area of movement	13,20 m²
Dimensions	70x115 cm
Overall Height	150 cm
Free falling height	125 cm
Foundations	1 pcs
Availability of spare parts	YES
EN 16630 compliance	YES
Age range	14+
Amount of users	2

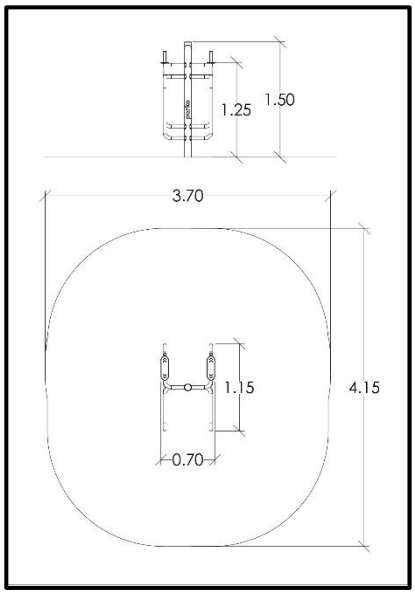

MATERIALS

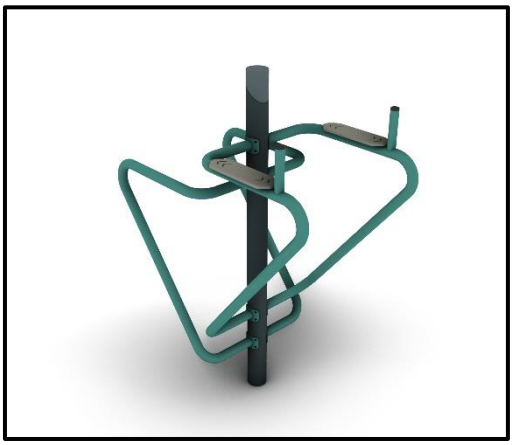

- Posts (colored): Hot Dip Galvanized and powder coated Steel
- Posts (non - colored): Hot Dip Galvanized (plain) or Stainless Steel (304 / 316L)
- Panels: HPL Antiskid 12mm (EXT)
- Metal Parts (colored): Hot Dip Galvanized and powder coated Steel
- Metal Parts (non - colored): Hot Dip Galvanized (plain) or Stainless Steel (304 / 316L)
- Steel Ropes apparatus: Steel core ropes braided with polypropylene (Ø16mm). Solid and aesthetic connectors made of injection molded durable plastic / end-connectors and sleeves made of durable aluminum alloy
- All other plastic elements: Fiber reinforced plastic
- Fasteners: Electroplated coated or Stainless Steel (304 / 316L)
- Chains: Hot Dip Galvanized (plain) or Stainless Steel (304 / 316L) / Ø6mm / According to DIN 766

Please note that the above list of materials concerns the articles of the whole series. Therefore, some of them are not used in the described article.

© Copyright Parko Play Experts (Parcotechniki) / Playground & Urban Equipment / Head office: Nea Santa-GR 61100 Kilkis-Greece / Tel: +30 23410 64700 / E-mail: info@parcotechniki.gr